HARKEN®

Winch LokHead 500 KIT.US

INLH500KIT.US

Instruction Manual

Please read these instructions carefully before operating equipment.

Original Instructions

UINLH500KIT.US-A 04-11-2020

Index 3
Introduction 5
About This Manual 5
Glossary and Symbols 5
General Information 6
Identification Data on the Device 6
Technical Support Information 7
Safety Information 8
General Advice 8
Intended Use 8
Improper Use 8
Safety Information 9
Personal Protective Equipment (PPE) 9
Residual Risks 9
Winch LokHead 500 KIT.US (INLH500KIT.US) 10
System Description 10
Parts Description 10
Outline 11
Standard Configuration 11
Tripod Use Configuration 12
MINIMUM BREAKING STRENGHT (MBS) 13
MAXIMUM WORKING LOAD (MWL) 13
Rope Requirements 13
Technical Data 13
Lokhead Winch Installation 14
Mounting Surface 14
Winch Entry Angle of Lifting Rope 14
Winch Location 14
Mounting Template - Plate Adapter 14
Installation Procedure 15
Positing the control lever 19
Using The Device - Checking The Device Before Use 20
Lifting Load 21
Lowering Load 23
Maintenance 24
Wash 24
Maintenance Schedule 24
Handling 24
Storage 24
Maintenance Schedule 25
Worldwide Limited Warranty 29

ABOUT THIS MANUAL

This User Manual is an integral part of the device and aims to provide all the information needed for its safe and correct use and for proper maintenance.

If there are instructions you do not understand, contact Harken.

Keep the manual in a safe place for future consultation. This manual may be modified without notice. Updated versions are available on www.harkenindustrial.com.

This manual is for qualified operators (refer to the Safety Information chapter for more information). Improper use of the device or incorrect maintenance could cause severe damage or death.

Harken accepts no responsibility for damage, personal injury or death caused by failure to observe the safety information and instructions in this Manual.

The manufacturer cannot be liable for damage, injury or consequential loss resulting from installation or servicing by unqualified personnel.

The manufacturer will also not be liable for damage, injury, or consequential loss resulting from incorrect operation or modification of the equipment.

GLOSSARY AND SYMBOLS

Intended Use - use of the device according to the information supplied in the instructions for use.

Improper Use - use of the device in a way different from that indicated in the instructions for use.

Qualified Operator - people who have attended specialisation, training, courses, etc. and are qualified for using lifting people devices to the current regulations of the Nation in which the device is used for rescue.

General User - a user that use the device to lifting loads

Text preceded by the following symbols contains very important information or instructions, especially in regards to safety.

Failure to observe these may lead to:

- danger for operators
- invalidity of the contract warranty
- refusal of the manufacturer to accept responsability

WARNING!
this denotes the existence of the potential danger, which could cause injury or damage if the information or instructions are not followed

NOTE!
this denotes important information concerning the device

IDENTIFICATION DATA ON THE DEVICE

Each device is identified by a laser marking on plate of the winch.

Always quote these references when contacting the manufacturer or service centres.

1. Name of product/model
2. Standard
3. Safety information on the diameter of the rope to use: minimum 11 mm, maximum 12,5 mm: this rope must be EN 1891 certified
4. Indicator of the Minimum Breaking Strength (MBS) of the device (reference to the NFPA certification from UL), with specific load for lifting load and lifting person
5. Serial number; the last two numbers are used for the year of manufacture of the device (e.g. 15 = the year 2015)
6. Certification laboratory mark
7. UL file number

TECHNICAL SUPPORT INFORMATION

LokHead Winch is covered by a warranty, as laid down in the general conditions of sale. If during the warranty period the device proves defective or suffers breakages, as indicated in the warranty, the manufacturer, after checking the device, will repair or replace the defective components. You are reminded that modifications carried out by the user, without explicit written authorisation from the manufacturer, will invalidate the warranty and relieve the manufacturer of any responsibility for damage caused by the defective product. The same considerations apply when spare parts that are not original or different from those explicitly indicated by the manufacturer. For all these reasons we advise customers to contact Harken Technical Support.

WARNING!
read the instructions in this manual attentively and carefully follow the indications it contains before using the LokHead Winch.

THE INLH500KIT.US MEETS THE AUXILLARY EQUIPMENT REQUIREMENTS OF NFPA 1983, STANDARD ON LIFE SAFETY ROPE AND EQUIPMENT FOR EMERGENCY SERVICES, 2017 EDITION.

TO BE COMPLIANT WITH NFPA 1983, THE FOLLOWING ADDITIONAL COMPONENTS MUST BE USED IN CONJUNCTION WITH THIS WINCH: Any NFPA UL Certified Carabiner and Strap.

Emergency Service Auxilliary Equipment In Accordance with NFPA 1983-2017

CLASSIFIED UL MH62748

MBS 22kN "T"

NOTE!
The user can find additional information regarding auxiliary equipment in NFPA 1500 and NFPA 1983.

GENERAL ADVICE

Use of the LokHead Winch for lifting people, in rescue situation, is restricted to qualified operators who have attended specialist, training, courses, etc. and are qualified for using rescue lifiting devices to the current regulations of the Nation in which the device is used for rescue.

Use of the LokHead Winch for lifting loads is permitted to a general user in accordance with National Regulations & Working Guidelines/Practices.

Harken is not responsible for damage caused by the LokHead Winch to people, animals or property in the case of:

- use of the LokHead Winch by operators not qualified operators for liting people
- improper use of the LokHead Winch
- lack of proper maintenance, as indicated in the Maintenance chapter of this Manual
- unauthorised modifications or changes
- use of spare parts that are not original or specific for the model
- total or partial failure to observe the instructions
- usage contrary to specific national regulations

INTENDED USE

This winch is designed to be used as a manually powered, rope-handling winch for lifting, lowering, and pulling loads.

Moreover the LokHead Winch is designed and compliant to be used in rescue operation, by a qualified operator.

The LokHead Winch must be used after being mounted on a suitable anchorage point.

All the equipment and anchor devices used in conjunction with the Lokhead winch to lift person in rescue operation , must be certified for their intended use in the rescue operation.

IMPROPER USE

The winch must not be used:

- for purposes different from those outlined in “Intended use” chapter, or for purposes not mentioned in this manual or different from those mentioned
- if unauthorised modifications or interventions have been carried out
- in an explosive atmosphere
- after it has fallen from a height of more than 1 meter onto a hard surface. In this case the device must be returned to the manufacturer or to a Harken authorised repair centre
- with wire rope
- with loads in excess of the Minimum Breaking Strength (MBS) of 22 kN (reference to the NFPA certification from UL) for lifting persons in rescue operation

WARNING!
Subjecting the winch to loads above the Minimum Breaking Strength (MBS) can cause the winch to fail or pull off the mounting surface suddenly, possibly resulting in severe injury or death.

PERSONAL PROTECTIVE EQUIPMENT (PPE)

It is necessary use gloves when operating the device.

RESIDUAL RISKS

You must pay attention to the following residual risks present when using LokHead Winch:

WARNING! Rotating Parts Trapping Risk
Always wear clothing and protective gloves that are form fitting. Avoid loose gloves or clothing and always follow the instructions in the manual.

SYSTEM DESCRIPTION

Parts Description

Pos.	Description
1	Control Lever
2	Knob
3	Stripper Arm
4	Drum
5	Removable Skirt
6	Plate
7	Handle Socket
8	Tripod Adapter

Pos.	Description
9	Clamping Plate
10	U-Bolt Kit
11	Self-locking Nut
12	Anchor Device
13	Connector
14	Handle Lock
15	Winch Handle
16	Pigtail

OUTLINE

Standard Configuration

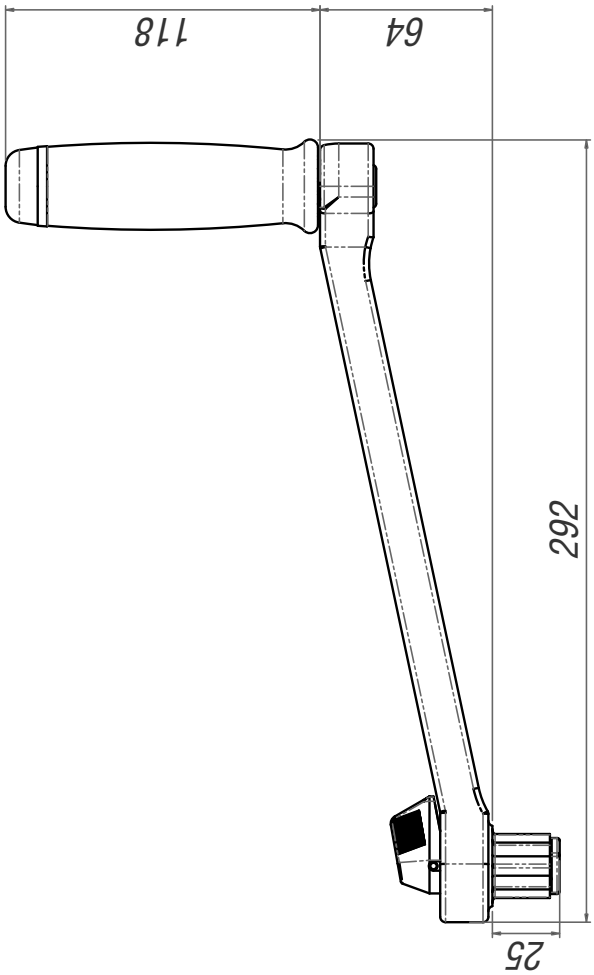

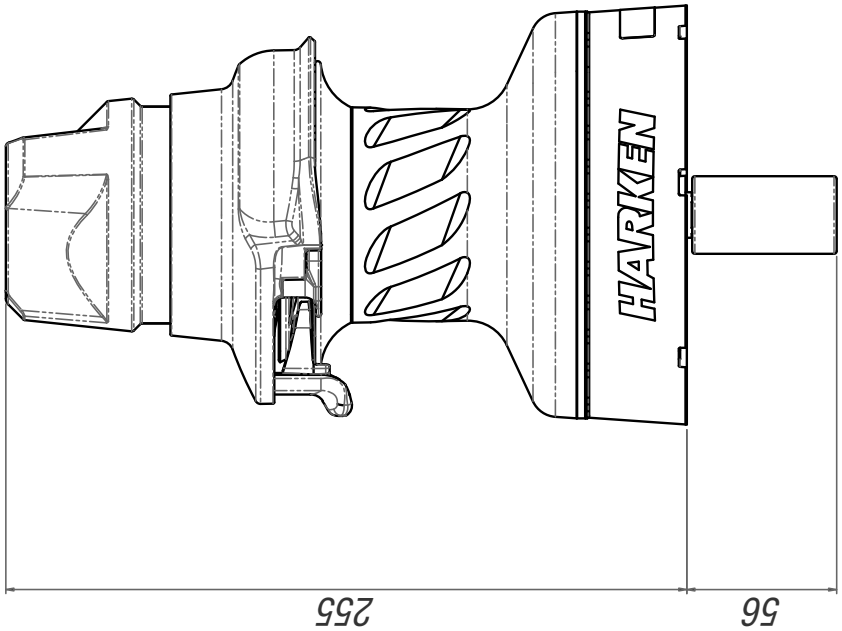

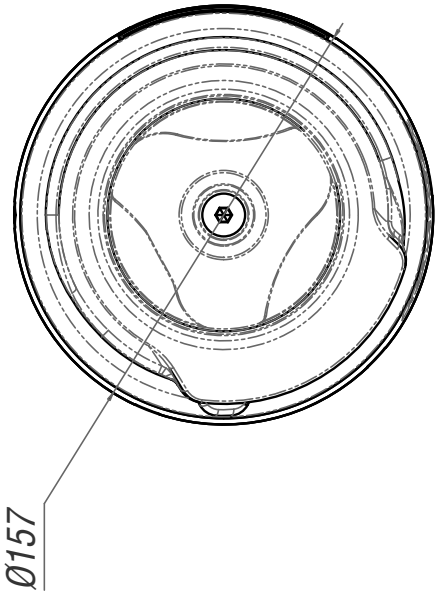

Note: all dimensions are in mm.

Tripod Use Configuration

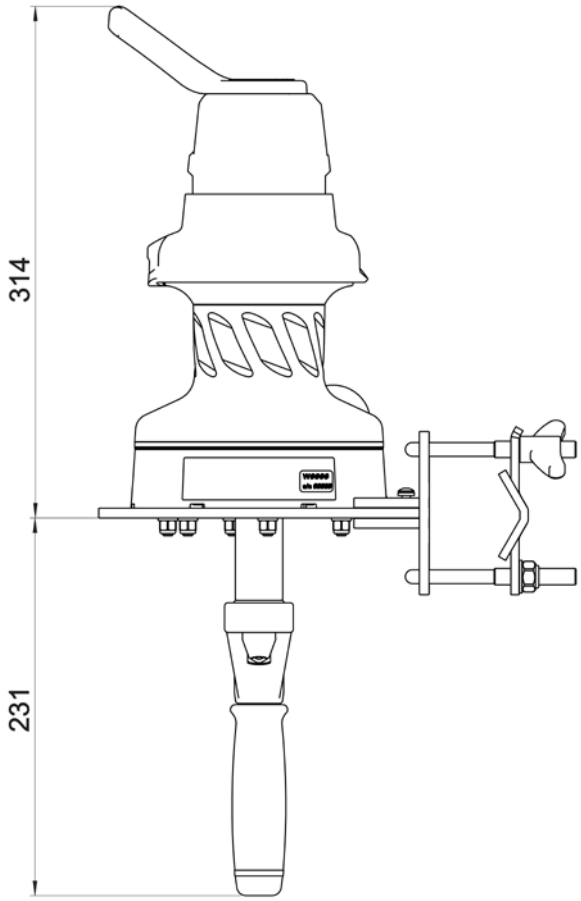

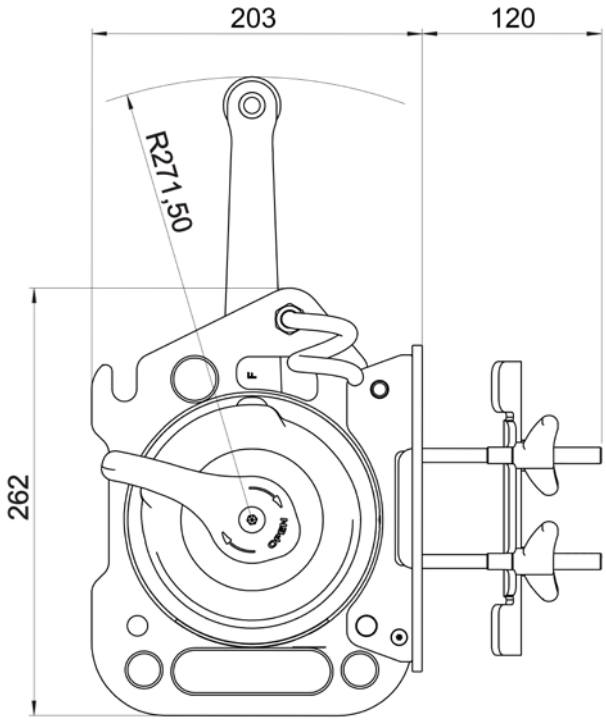

Note: all dimensions are in mm.

MINIMUM BREAKING STRENGHT (MBS)

The Minimum Breaking Strength (MBS) of the Winch LokHead 500 KIT.US is:

- 22 kN (reference to the NFPA certification from UL) for lifting person in rescue operation

MAXIMUM WORKING LOAD (MWL)

The Max Working Load (MWL) of the Winch LokHead 500 KIT.US is:

- 500 kg (1102,31 lb) for lifting loads
- 220 kg (485.02 lb) for lifting person in rescue operation

WARNING!
Do not apply a load greater than the Max Working Load (MWL) to the Winch LokHead 500KIT.US

ROPE REQUIREMENTS

WARNING!
Use only EN1891 certified ropes with a diameter of between 11 - 12.5 mm (7/16" - 1/2") for lifting person.

WARNING!
Use only ropes in good condition.

WARNING!
For correct maintenance of ropes consult the rope Usage Manual.

WARNING!
Do not use with wire rope.

TECHNICAL DATA

Rope	Semi static 11mm-12.5mm (7/16"-1/2") EN1891 rope for lifting person in rescue operation.
Minimum Breaking Strength (MBS)	22 kN lifting loads (reference to the NFPA certification from UL)
Max Working Load	500 kg (1102,31 lb) - lifting loads 220 kg (485,02 lb) - lifting person in rescue operation
Power Ratio	13,50:1 - 1st speed / 39,90:1 - 2nd speed
Gear Ratio	2,13:1 - 1st speed / 6,28:1 - 2nd speed
Winch Weight	4,2 kg (9,25 lb)
Winch Handle Weight	0,5 kg (1,10 lb)
Plate + Plate Adapter Weight	2,8 kg (6,17 lb)
Tripod Adapter	2,2 kg (4,85 lb)
Winch Dimensions	311 x Ø157 mm (12,24" x Ø6,18")
Recommended working temperature range	-20°C +50°C

LOKHEAD WINCH INSTALLATION

Mounting Surface

Winch must be installed on a flat surface, reinforced if necessary, to withstand a load equal of 22 kN.

Winch Entry Angle of Lifting Rope

Winch entry angle must be 8° with a tolerance of ±2° to avoid rope overrides.

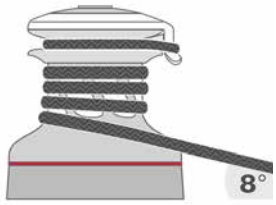

> **WARNING!**
> Verify entry angle of rope. It must be 8° with tolerance of ±2°, to avoid rope overrides and damaging winch or making winch inoperable, leading to loss of control, possibly resulting in severe injury or death.

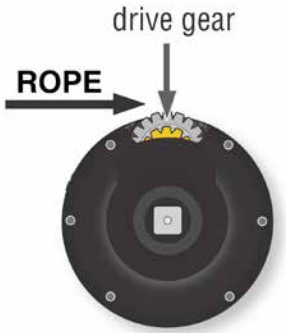

Mount winch so drive gear is positioned where rope enters winch drum.

Note: ▲ on winch skirt identifies location of drive gear.

> **WARNING!**
> Mount winch so that drive gear is positioned where rope enters winch drum. Incorrect positioning of drive gear can weaken winch leading to failure, possibly resulting in severe injury or death.

Winch Location

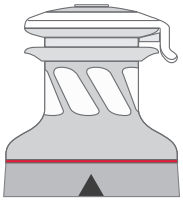

Winch must be installed in a position to allow sufficient working space around unit, so not to impede operation of handles.

Winch must be installed in a position to ensure visibility of the lift trajectory by operator at all times.

> **WARNING!**
> Incorrect installation of winch may cause severe injury or death. Consult equipment supplier if in doubt about correct position of winch.

Harken® accepts no responsibility for defective installation or reassembly of its winches. If you have questions or concerns, Harken® Tech Service is at your disposal at techservice@harken.it.

Mounting Template - Plate Adapter

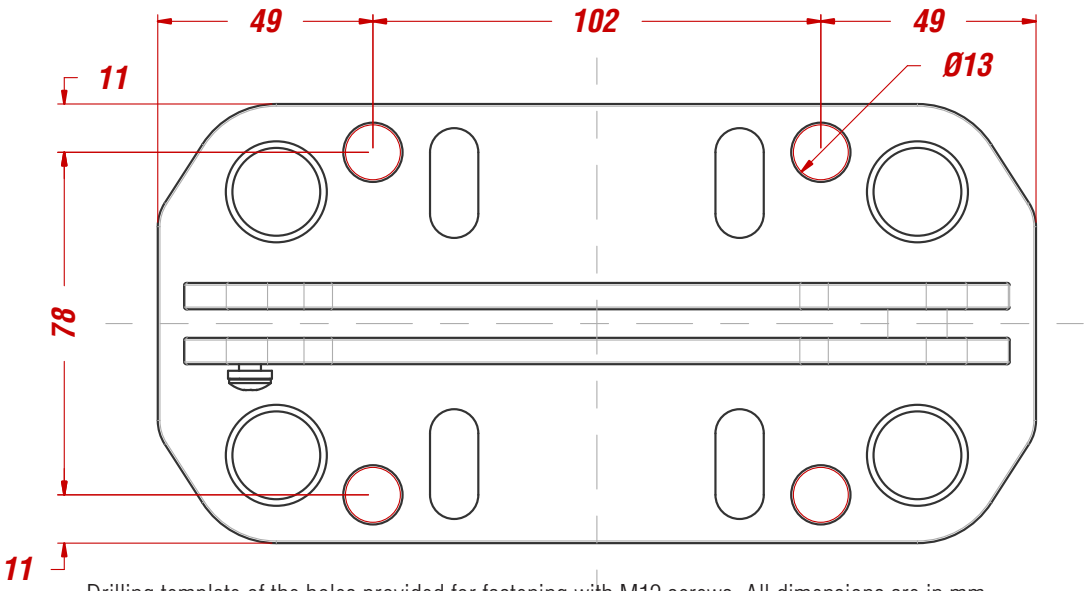

Drilling template of the holes provided for fastening with M12 screws. All dimensions are in mm.

Installation Procedure

Install the LokHead winch and plate adapter fixing the plate with four (4) M12 bolts, washers and nuts on a flat surface, which whithstand a load equal of 22 kN.

It is installer's responsibility to choose correct bolts, taking into account loads they will have to withstand.

Harken assumes no responsibility to incorrect installation of winch and plate adapter or for use of incorrect mounting bolts.

WARNING!
Failure to use correct number and type of mounting fasteners or failure to ensure correct mounting surface strength can result in winch pulling off suddenly and unexpectedly during high loads, possibly resulting in severe injury or death.

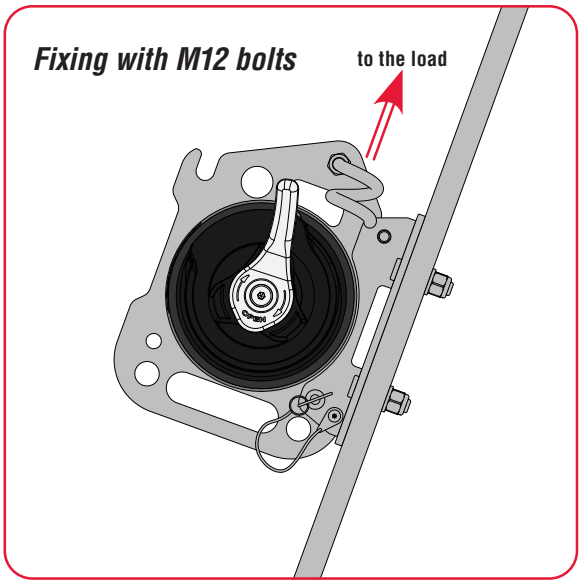

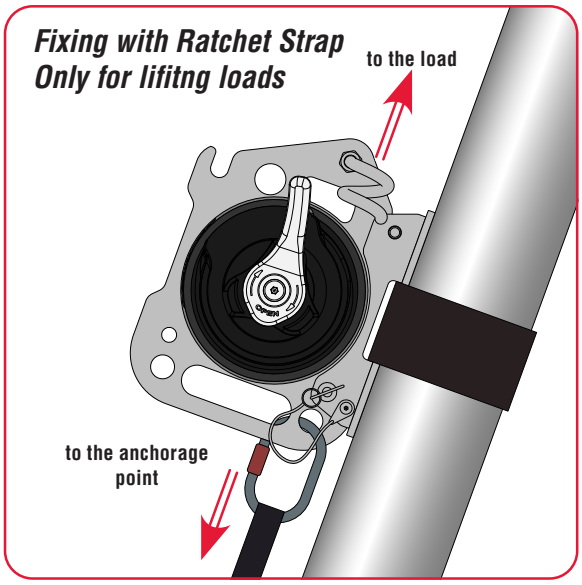

Only for lifting loads:

- It is possible to fix the plate using ratchet strap, connectors, anchor devices.
- It is the installer's responsibility to carry out all structural tests needed to ensure that the mounting surface can withstand the load.

Ensure the plate is securely attached to the mounting surface, so that it can operate under load without significant movement.

The winch plate must be installed so that the line can be led through the pigtail to the winch drum, with no more than 30° of line deflection in any plane. The installation should use pulley deflectors if necessary to ensure a fair lead to the winch. The pigtail should not take any angle load.

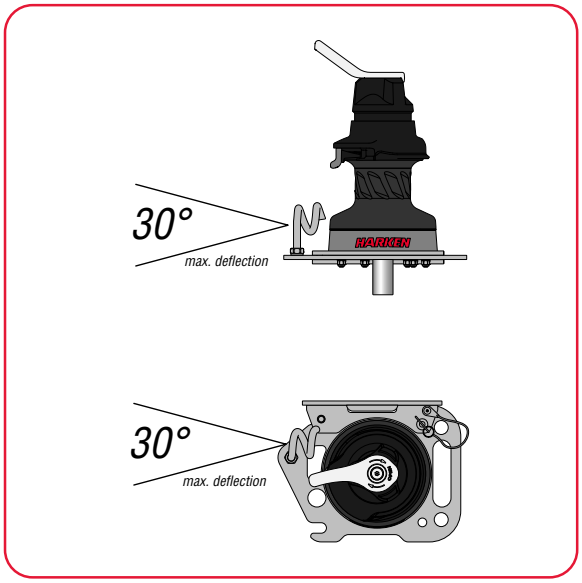

The winch plate must be installed in a position to allow sufficient working space around unit, so not to impede operation of handles.

Winch plate must be installed in a position to ensure visibility of the lift trajectory by operator at all times.

WARNING!
Incorrect installation of winch plate may cause severe injury or death. Consult equipment supplier if in doubt about correct position of winch plate.

The LokHead winch can be installed on a variuos type of tripods, refer to the following table for compatibility list.

WARNING!
Before installing the plate on the leg tripod check the dimensional compatibility between them.

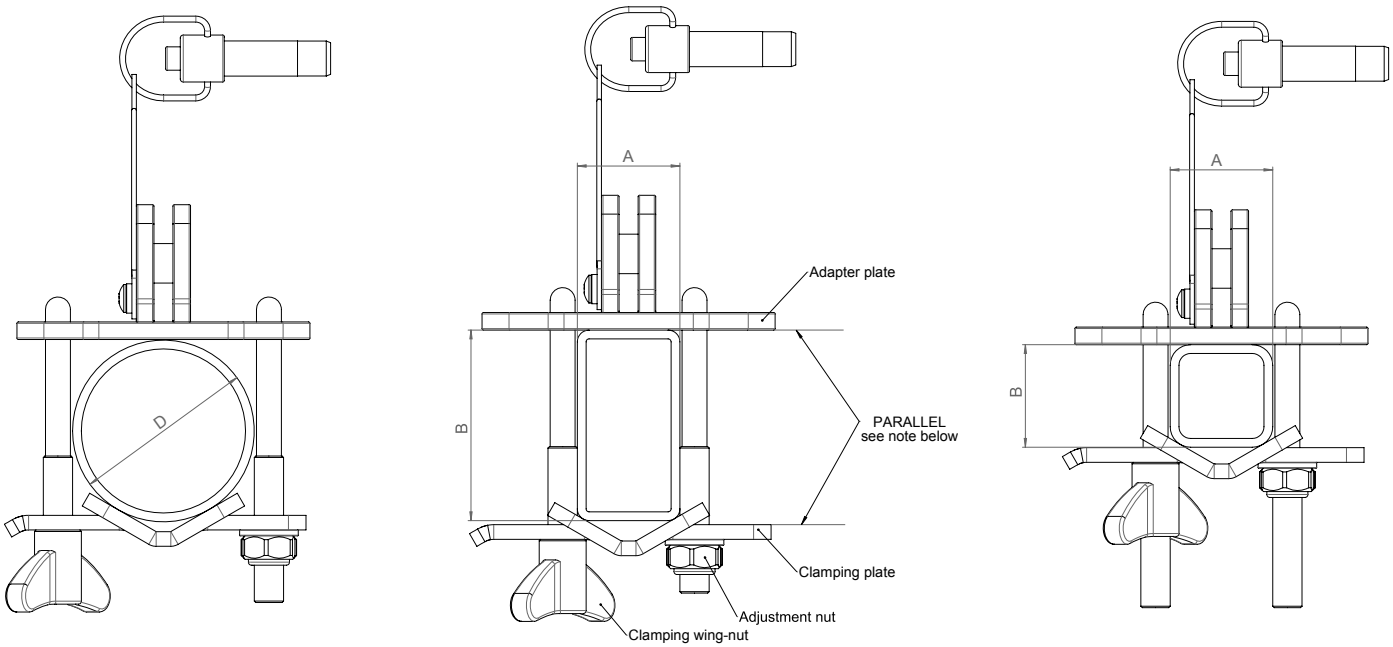

- Round section diameter range D: Ø40-Ø65 mm.
- Square section range AxB: from 35x35 mm to 60x60 mm.
- Rectangular section max range A: from 35 mm to 60 mm.
- Rectangular section max range B: from 35 mm to 92 mm.

NOTE: Set the adjusting nut according to "B" dimension to mantain parallelism between plates in clamping position (clamping wing-nut tightened)

1. Position the tripod adapter on the tripod

2. Tighten the two nuts with a wrench.

3. Tighten the 2 wing nuts.

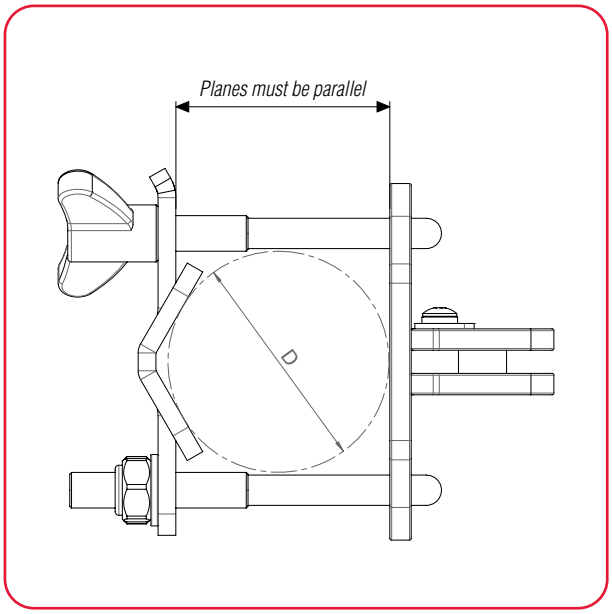

WARNING!
Make sure that the plates of the Tripod Adapter are locked and parallel as shown above.

4. Position the winch and plate on the tripod adapter.

5. Fix surely the plate with the self-locking nut.

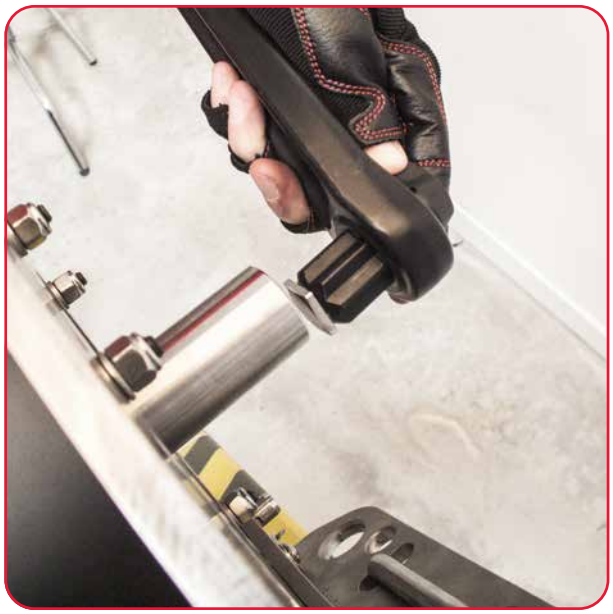

6. Insert the winch handle into the socket.

7. Engage the connector and the anchor device to the plate on the winch side, and to a safe anchorage point on the opposide side.

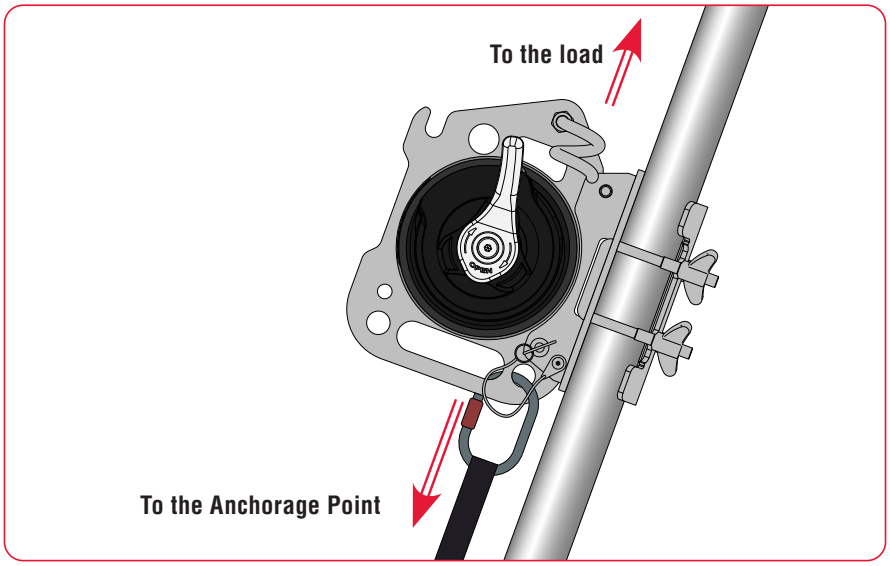

Positing the control lever

1. Untighten the knob screw.

2. Position the control level using the screw supplied with transformation kit.

3. Tighten the control lever screw.

Fix surely the plate to the plate adapter with the self-locking nut.

USING THE DEVICE - CHECKING THE DEVICE BEFORE USE

Before and after every use, visually inspect the Winch LokHead and plate for signs of wear, damage or failure. If such signs are present, do not use the device. If the worn or defective parts are not immediately replaced, the manufacturer will assume no responsibility for resulting damage or accidents.

Check the movement of the rope grab cover.

Check that the rope grab knob is working by rotating the knob and releasing it.

WARNING!
Before each use, visuallly inspect the LokHead winch for signs of wear, damage or failure. If such signs are present, do not use the device. if the worn or defective parts are not immediately replaced, the manufacturer will assume no responsibility for resulting damage or accidents.

WARNING!
Before each use inspect winch and self-tailing jaws for degradation, cracks, or wear that may affect locking strength and operation. Check lifting rope to make sure that it is free from wear. If in doubt, replace with a suitably strong rope.

WARNING!
Before each use check winch base securely fastened to plate.
Failure to use correct number and length of mounting fasteners and/or failure to tighten them correctly can result in winch pulling off suddenly and unexpectedly during high loads which may cause load to drop, possibly resulting in severe injury or death.

WARNING!
Before each use check the winch drum cannot be turned by hand counter-clockwise.

LIFTING LOAD

WARNING!
Keep fingers, loose clothing, hair etc away from winch. Area around winch handle shouldd be kept clear of people and objects at all times.

1. Feed the rope through the pigtail. Start at base and wind rope onto drum in a clockwise direction.

2. Ensure that the rope does not override (overlap) on winch.

WARNING!
Take at least two turns of the rope around the winch drum, and if it slips under load increase the number of turns to a maximum of four, taking care not to overlap the rope.

NOTE!
The number of turns needed round the winch drum depends on the load and the condition of the rope. Check the device's descending capacity in its working configuration.
In case of difficulties unwind the rope, and reduce the turns to not less than 2 wraps, until you have the optimal configuration.

WARNING!
Never allow rope to (override) overlap on winch drum. This can cause rope to jam and can prevent load from being lifted/lowered. Tension on rope to load must be relieved to clear override (overlap). This procedure carries a risk of serious injury or death if load drops or becomes uncontrollable.

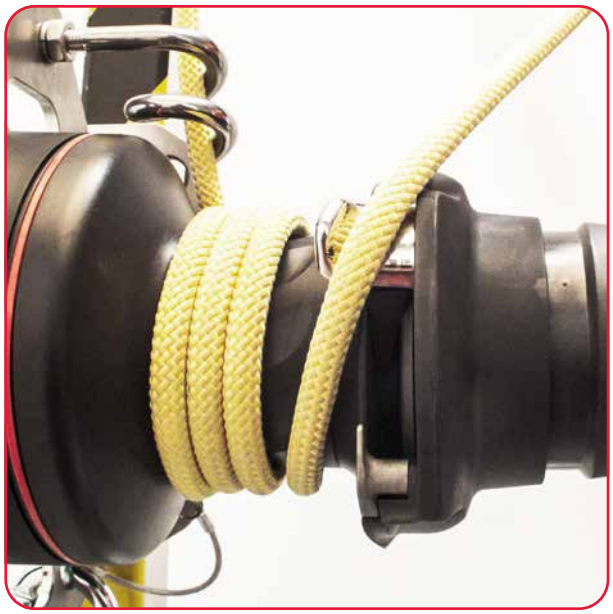

3. Pull rope through to take up any slack, then pass the rope on the stripper arm by winding rope clock-wise and pulling tight to engage.

4. Fit the rope into the rope grab. Raise the cover to make this easier. Position the rope inside the stopper.

CORRECT

INCORRECT

WARNING!
Ensure correct placement of the rope on the stripper arm and into the spring loaded selftailing jaws.

5. Begin turning handle counterclock-wise. Gears engage automatically depending on direction handle is rotated.
1st gear: rotate handle counterclock-wise. 2nd gear: rotate handle clock-wise.

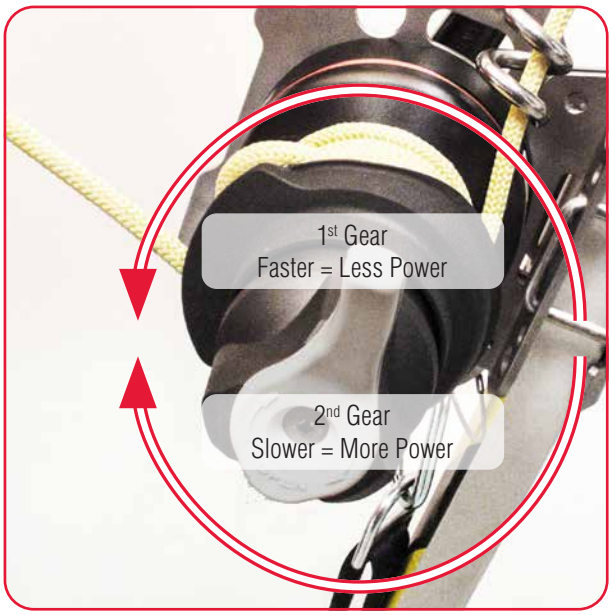

6. When the handle becomes difficult to rotate in 1st gear, reverse the direction to engage 2nd. A higher power ratio makes a heavier load easier to lift with the same effort.

NOTE!
The maximum input speed of the LokHead Winch is 60 rpm.

LOWERING LOAD

To lower the load with one hand grasp the rope.

With the other hand, turn the knob (or Control Lever if installed) clockwise to allow the rope to slip on the winch drum and permit a controlled descent. To adjust descent speed, manually control the speed at which the rope leaves the winch by holding rope with arm out and bringing it in towards the winch drum.

To stop the descent, release the knob.

WARNING!
To lower the load, in case of difficulties, unwind the rope, and reduce the turns to not less than 2 wraps, until you have the optimal configuration. Do not take rope turns off winch drum until rope is completely unloaded.

MAINTENANCE

NOTE!
A formal inspection of the winch must be performed at least annually by trained personell. The inspection should be recorded in an inspection and maintenance log.

Wash

Wash winch frequently with fresh water.

Do not allow cleaning products or other caustic solutions to come into contact with winch, especially anodized, chrome-plated, or plastic parts. Do not use solvents, polishes, or abrasive pastes on logos or winch stickers.

Maintenance Schedule

Winch must be completely overhauled, cleaned, and lubricated at least every 12 months. Maintenance of winches must be carried out exclusively by trained personnel. Harsh environment and/or heavy use may require more frequent maintenance.

NOTE!
Do not replace or modify winch with a part that was not designed for it.

WARNING!
Periodic maintenance must be carried out regularly. Lack of adequate maintenance shortens the life of the winch, can cause serious injury and also invalidate the winch warranty. Maintenance of winches must be carried out exclusively by trained personnel.

WARNING!
Remove auxiliary equipment from service if the equipment does not pass inspection or if there is any doubt about the safety or serviceability of equipment.

WARNING!
Return the winch, auxiliary equipment, to the manufacturer or to a qualified service center if the equipment is dropped or impact-loaded.

WARNING!
Repair the auxiliary equipment only in accordance with the manufacturer's instructions.

HANDLING

Protect against extreme temperatures: less then -20° C or more then +50° C
Extreme heat may distort composite parts.

Extreme cold can cause the material to become brittle and cause the lubrication to congeal.

WARNING!
Do not expose the software of the auxiliary equipment to flame or high temperature and carry the equipment where it will be protected as it could melt or burn and fail if exposed to flame or high temperature.

STORAGE

Store in clean/dry place

Avoid impact which could damage jaws and skirt; ensure good packaging when shipping.

MAINTENANCE SCHEDULE

Owner name	
Product name and Model	
Serial Number	
Year of manufacture	
Date of purchase	
Date of first use	
Maintenance interval	Annual

Date of Service	Description of Service	Name and Signature of Maintanance Operator	Date of Next Intervention

Date of Service	Description of Service	Name and Signature of Maintanance Operator	Date of Next Intervention

Manufacturer
Harken USA
N15W24983 Bluemound Rd., Pewaukee, WI 53072-4974 USA
Tel: (262) 691-3320, Fax: (262) 701-5780,
Web: www.harken.com
Email: harken@harken.com

Worldwide Limited Warranty

Refer to the Harken World Limited Warranty on the website at:

http://www.harkenindustrial.com/

The product warranty is accepted only if it has been maintained as specified in this Manual by Harken authorized personnel and is accompanied by Maintenance Schedule properly compiled